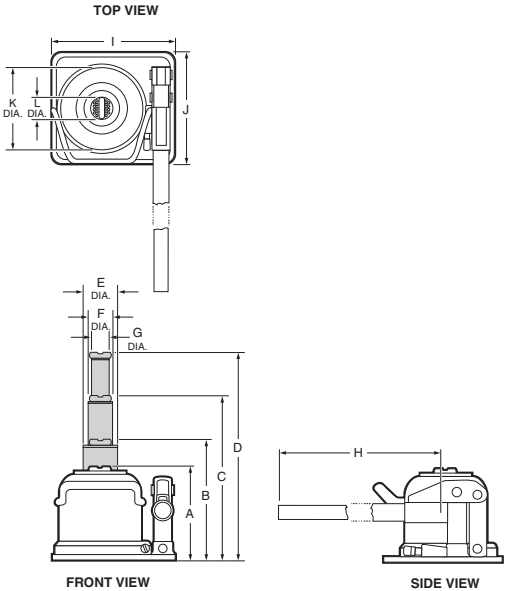

MODEL NUMBER	CAPACITY	A	B	C	D	E	F	G	H	I	J	K	L	SHIPPING WEIGHT (Lbs.)
76637	**7 TON - 1st Stage** **7 TON - 2nd Stage** **3 TON - 3rd Stage**	4.875"	6.1875"	8.25"	10.625"	2.200"	1.530"	.982"	23.5"	6.5"	6"	4.510"	1.350"	19